GENTONA

USER MANUAL

MADE IN THE UK

BioCote®

UK CA CE

Scan to access the Gainsborough Gateway and demonstration videos of how to use this specialist bath

GAINSBOROUGH GATEWAY

Gainsborough SPECIALIST BATHROOMS

Empowering. Healthcare. Solutions

G BIO

TABLE OF CONTENTS

Introduction 3
Copyright 3
Preface 3
Intended Use 3
Recycling 4
Future Product Development 4
Bath and Equipment Overview 5
Specifications and Dimensions 7
Specifications 7
Dimensions 8
Safety Information 9
Purposes of Warnings, Cautions and Notes 10
Health and Safety Warnings 10
Health and Safety Cautions 10
Health and Safety Notes 12
Labels 13
Identification Label 14
User Information 15
Remote Handset 16
Close the Pop-Up Waste 17
Fill the Bath 18
Transfer Bather into the Bath 19
Top Up the Bath 21
Transfer Bather Out of the Bath 21
Empty the Bath 22
Optional Equipment 23
Shepherd's Crook Shower 23
Easy Shower 5 24
Footboard 25
Autofill 26
Twin Lever Bath Filler 27
Maintenance and Cleaning 28
Seat Post Seal 31
Troubleshooting 32
Warranty 34
Declaration of Conformity 35
Electromagnetic Compatibility 37
Guidance and Manufacturer's Declaration - Electromagnetic Immunity 37

INTRODUCTION

COPYRIGHT

This user manual is supplied with the purchase of a bath and any optional equipment and is intended to provide information on its correct and safe use. Copying it for these purposes is only permitted if it is copied in its entirety to ensure all the pertinent health and safety related information along with the user information is retained together as a whole. Copying part of the manual for the purposes detailed above is not permitted under any circumstances © 2026.

Gainsborough Healthcare Group Ltd., 10 & 11, The Oaks, Clews Rd, Redditch, England B98 7ST.

Contact: Gainsborough Healthcare Group Ltd. 01527 400022

PREFACE

Additional reading and related information can be obtained upon request, including Circuit Diagrams, Component Parts Lists, Descriptions, Calibration Instructions, and other information that will assist service personnel.

If an alternative format of this or any other documentation is required, please contact your authorised representative or **Gainsborough Healthcare Group Ltd**. on 01527 400022.

INTENDED USE

This equipment is intended to facilitate the bathing of residents in care facilities or in a home care environment. The product is designed to help people who struggle with getting in and out of a bath, especially those with physical limitations. It's useful for both hygiene and relaxation purposes.

The bather sits on a low-positioned seat outside the bath, which is already filled with water. Then, operated by the bath handset, the motorised mechanism lifts the seat vertically. When the mechanism reaches its highest point, it rotates the seat until it's directly over the bathtub. At this point, the entire bath’s height can be adjusted to suit the needs of the carer or healthcare professional. The seat can then continue to be lowered until it's fully inside the bathtub. This way, the bather can enjoy their bath comfortably and easily.

RECYCLING

The following materials are used in the manufacture of the bath. Separate the materials and dispose of them at a recycling centre in line with your local authority's recommendations.

- Metal and Acrylonitrile Butadiene Styrene (ABS) plastic
- Packaging: Wood, Cardboard and Plastics
- Glass Reinforced Plastic (GRP) and Wood
- Batteries and other Electrical Components as applicable

FUTURE PRODUCT DEVELOPMENT

Gainsborough Healthcare Group Ltd operates a policy of continuous product development and reserves the right to change specifications and designs without prior notice.

BATH AND EQUIPMENT OVERVIEW

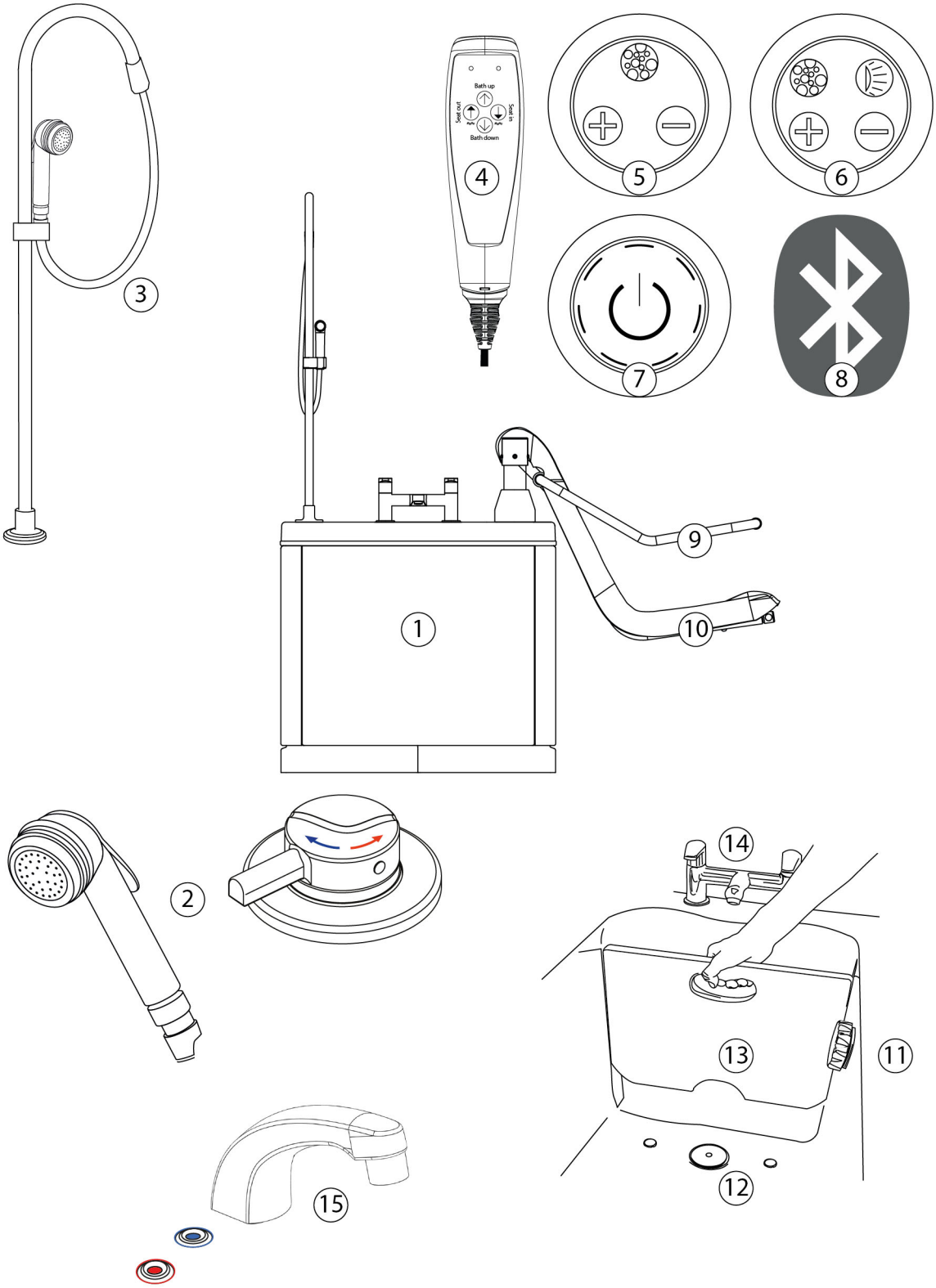

Fig 0391

Key: Refer to Fig 0391

1 Height adjustable bath

2 Easy Shower 5 shower system (1700 mm Option)

3 Shepherd's Crook shower system (1500 mm Option)

4 Remote handset

5 Air spa (Option)

6 Air spa and chromotherapy lighting (Option)

7 Chromotherapy lighting (Option)

8 Sound system compatible with smart phone and tablets (Option)

9 Arms - moveable

10 Powered seat

11 Pop-up waste release

12 Pop-up waste

13 Footboard (1700 mm Option)

14 Twin lever bath filler (Option)

15 Autofill (Option)

SPECIFICATIONS AND DIMENSIONS

SPECIFICATIONS

Maximum User Weight:	165 kg
Water Capacity:	1500 mm - 200 litres, 1700 mm - 230 litres
Approximate Bath Weight (empty):	1500 mm - 142 kg, 1700 mm - 170 kg
Approximate Bath Weight (full):	1500 mm - 342 kg, 1700 mm - 400 kg
Typical Mechanical Operation Times:	Bath raise - 36 secs Bath lower - 32 secs Seat - 232 secs/cycle
Class 1 Electrical Device	
Power Supply:	Mains 230V to be supplied via 30mA RCD
Operating Voltage:	24V
Battery Backup:	24V DC (lead acid), for emergency use only
Actuator Duty Cycle:	Max. 10% or 2 min continuous use followed by 18 min not in use. The life cycle test has been performed with a stabilised power supply (10% duty cycle) on a 20 mm stroke actuator at max. load for 10,000 cycles at ambient temperature.
Water Supply:	Unblended hot and cold water at 1 bar min., 5 bar max. pressure
Hot Water Temperature:	55°C to 65°C
Cold Water Temperature:	5°C to 20°C
Flow Rate:	10 litres per minute
'A' weighted sound emission:	<60 dB(A)
'A' weighted sound emission with air spa system (option):	<75 dB(A)
Ambient temperature range:	5°C to 50°C
Relative humidity range:	10-80%
Atmospheric pressure range:	50 kPa to 106 kPa
This bath includes BioCote® technology which has been proven to reduce bacteria and even some viruses, including influenza A H1N1, E.coli, MRSA and Pseudomonas.	

DIMENSIONS

Gentona 1500 and 1700 mm

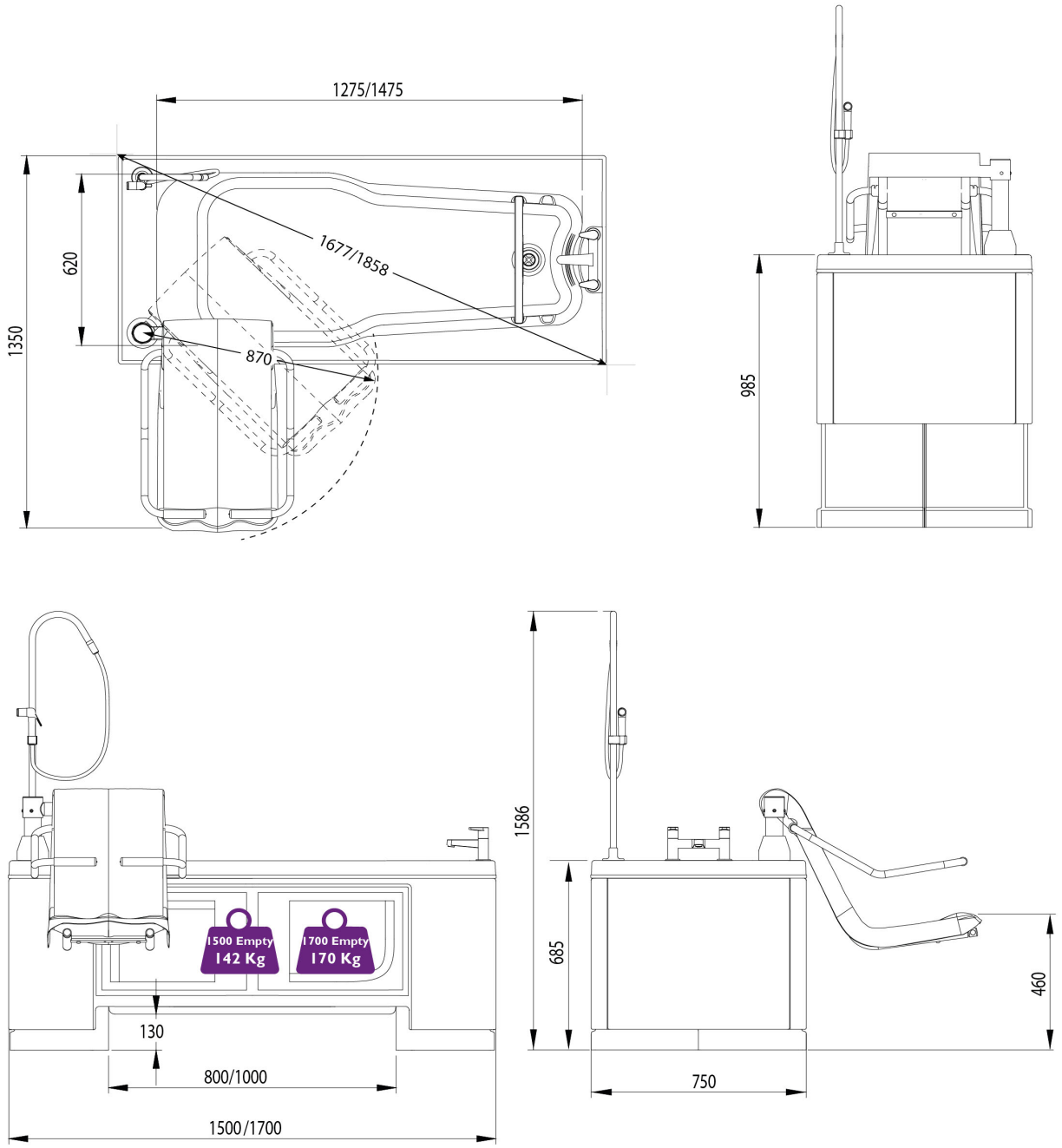

Fig 0013

Dimensions in millimetres (mm). Right-hand example (handing of a bath is indicated by the exit point of the bath when in a seated position).

SAFETY INFORMATION

WARNING RISK OF ELECTROCUTION/FIRE/ENTRAPMENT:
Modifying the bath/equipment could cause serious injury or prove fatal. Under **NO CIRCUMSTANCES** should you modify the bath/equipment.

Your bath, supplied by the **Gainsborough Healthcare Group Ltd.**, is part of a range of products designed and built for bathers in care homes, hospitals and other specialist care environments.

Please ensure that you read and thoroughly understand this user manual. This information is vital for the correct operation of the bath, ensuring the safety of both bather and operator at all times.

Please use this bath in the manner specified in this manual. **Gainsborough Healthcare Group Ltd.** do not take any liability if the product is misused.

To ensure best practice and safety the bath must be operated only by a trained professional with adequate understanding of the specific environment, its common practices and processes. It is vital that regular assessments of the bather are undertaken to ensure the bath remains suitable. **Gainsborough Healthcare Group Ltd.** does not take responsibility for individual product suitability. This is the duty of the care facility.

Depending on configuration, your bath may have sensory features installed. These are for the enjoyment and relaxation of the bather. To ensure these features are used appropriately, the bather's condition must be assessed prior to operation.

Accessories and any detachable parts must be used as described in this user manual and must not be modified or used with other equipment not specified in this user manual.

This bath is for hygiene and relaxation purposes only. DO NOT use for any other purpose.

To avoid entrapment, make sure that the path of movement is free from obstacles. Make sure the bather retains a comfortable and safe position. To avoid injury, do not leave the bather at any time. The bather must not be allowed to exit the bath whilst the bath is in the raised position. This could potentially cause serious injury to the bather and could also damage the product. **Gainsborough Healthcare Group Ltd.** does not take any liability if misused in this manner.

Any modifications to the bath or significant changes to its surrounding environment and installation may affect important safety and performance related functions. **Gainsborough Healthcare Group Ltd.** is not responsible for any safety incidents or functional performance issues arising as a result of any modifications that have not been approved in advance by **Gainsborough Healthcare Group Ltd**.

If you have any questions regarding the user manual or operation of the bath, feel free to contact your authorised representative or **Gainsborough Healthcare Group Ltd.** on 01527 400022.

PURPOSES OF WARNINGS, CAUTIONS AND NOTES

Warnings, Cautions and Notes used throughout this manual have the following meanings:

WARNINGS: Warnings used throughout this manual **MUST** be followed carefully. Failure to do so could result in serious bodily injury or could be fatal.

CAUTIONS: Cautions used throughout this manual **MUST** be observed to avoid damage to your bath or additional optional equipment.

NOTES: Notes used throughout this manual contain important information and useful tips on the operation of this product.

HEALTH AND SAFETY WARNINGS

The following warnings and any additional warnings used throughout this manual **MUST** be followed carefully failure to do so, could result in serious bodily injury or could be fatal.

WARNING RISK OF ENTRAPMENT: Operating the bath without appropriate training in its safe use could cause serious injury or be fatal by entrapment. Ensure that the people operating the bath have been trained, read this manual and understand its safe use.

WARNING RISK OF ENTRAPMENT: Operating the bath when people are nearby could cause serious injury or be fatal by entrapment. Ensure that nobody is close to the moving equipment during its operation.

WARNING RISK OF ELECTRIC SHOCK: Using electrical appliances near to the bath could cause electric shock which may be fatal. **DO NOT** use electrical appliances within 3 metres of the bath.

WARNING RISK OF ELECTRIC SHOCK: Ensure the electric supply is installed by a qualified electrician using current legislation. The protective earth terminal of the equipment must only be connected to a supply main with protective earth using a 30mA Residual Current Device (RCD) Type A or F.

WARNING RISK OF SLIPPING: Water left on the floor could cause serious injury or be fatal by slipping. Ensure the floor area around the bath is always free from water. Clean and dry **ANY** spillages immediately.

HEALTH AND SAFETY CAUTIONS

The following cautions and any additional cautions used throughout this manual **MUST** be observed to avoid damage to your bath or additional optional equipment.

Gainsborough Healthcare Group Ltd. is not responsible for replacing any items damaged as a result of not observing the following cautions.

CAUTION: Bath could be damaged irreparably if objects or equipment are trapped during operation. Ensure nothing is left under the seat that could become trapped.

CAUTION: Remote handset could be irreparably damaged if fully immersed in water. Ensure the remote handset is **ALWAYS** returned to its holder after use.

CAUTION: The bath and any additional equipment could be damaged if used for anything other than its intended use, which may be irreparable. **NEVER** use the bath for anything other than its intended use.

CAUTION: The bath and any additional equipment could be damaged, which may be irreparable, if abrasive cleaners, bleach or scourers are used. Use cleaning methods outlined in the Maintenance and Cleaning section only.

CAUTION: Do not exert excessive pressure on the bath panels as this may cause them to become ill-fitting or damaged over time.

HEALTH AND SAFETY NOTES

The following notes and any additional notes used throughout this manual contain important information and useful tips on the operation of this product.

NOTE: The system batteries must be charged for 24 hours prior to using the bath. You may test the bath seat operation empty to ensure it is working correctly.

NOTE: If this unit is to be utilised by many different bathers, we would strongly recommend that it is cleaned regularly with a medical disinfectant as well as following the strict cleaning routine outlined in the Maintenance and Cleaning section.

NOTE: In the event of mains failure during use of the bath, back-up batteries will enable the bather to exit the bath. The bath seat will then be disabled until mains power is restored.

NOTE: If any serious incident occurs in relation to the device this should be reported to the manufacturer and the competent authority in which the user and/ or patient is established.

NOTE: Expected lifetime of this product is 8 years and approximately 5 years for the battery back-up system, when adhering to our service and maintenance guidelines.

LABELS

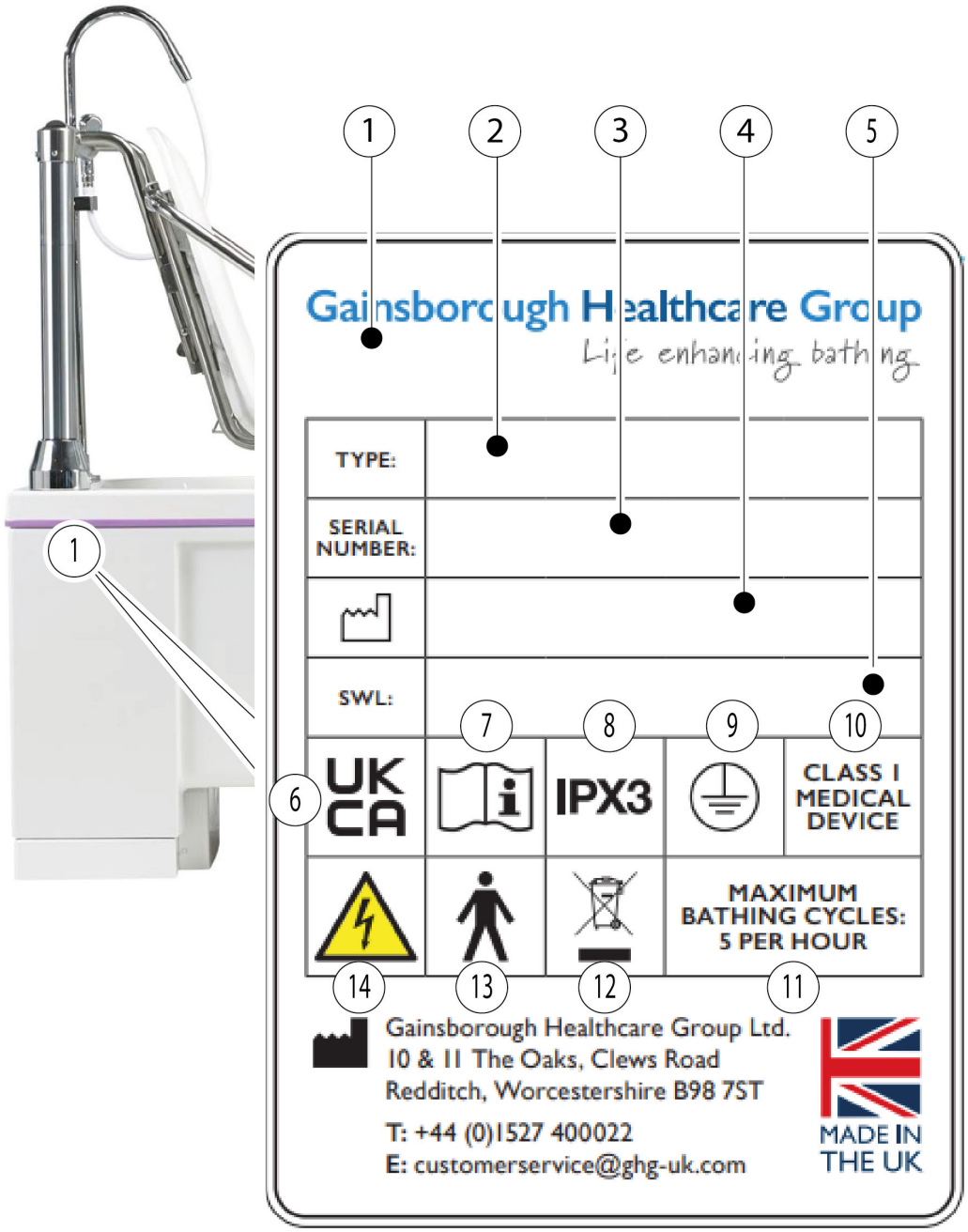

Fig 0043

IDENTIFICATION LABEL

NOTE: The Identification label attached to your bath contains critical information! **DO NOT** remove it from its location. The serial number is required for maintenance, information or spare parts. It is recommended that you make a note of it below for future reference.

KEY (Refer to Fig 0043)

1	Identification label and its location
2	Type of bath this user manual refers to
3	Unique identification number (this is needed for maintenance, information or spares)

Serial Number:

4	Manufacturing location
5	The Safe Working Load
6	UK Conformity Assessed marking
7	Read instruction manuals and accompanying documents
8	Ingress Protection (IP) rating (Protected against direct moisture spray at an angle of 60° from the vertical)
9	Type of protection: Class 1
10	Class 1 medical device
11	Maximum number of baths allowed per hour
12	No domestic waste. Separate electrical and electronic components for recycling in accordance with European Directive 2012/19/EU (WEEE)
13	Application part 'Type B' according to DIN EN 60601-1
14	This product is powered. Warning dangerous voltage

USER INFORMATION

The following steps are a pre-requisite before using the bath in **ANY** capacity.

1. Read the entire user manual.

2. Ensure you have received appropriate training in its safe and proper use for the bath and any additional optional equipment (this should be done following installation hand over).

3. Ensure the bath back up batteries have been fully charged for a minimum of 24 hours prior to use.

4. Inspect the bath for any cracks or damage.

5. Test the bath and all safety devices/equipment (empty - without a bather) prior to its first use and periodically afterwards in line with the maintenance recommendations, see *maintenance and cleaning, page 28*.

6. Operate the **Seat out** function. The seat should raise up to its maximum height, turn outside the bath and lower without excessive noise.

7. Operate the **Seat in** function. The seat should raise up to its maximum height, turn inside the bath and lower without excessive noise. Once the operation is complete, press **Seat out** again to raise the seat until it's a few centimetres from its highest point, otherwise the **Bath up** function will not operate.

8. Operate the **Bath up** function. Ensure the bath rises to its maximum height without excessive noise.

9. Operate the **Bath down** function. Ensure the bath lowers to the floor without excessive noise.

If you are in any doubt or you cannot answer yes to **ALL** the above steps, then seek advice from your authorised representative or contact **Gainsborough Healthcare Group Ltd.** on 01527 400022.

REMOTE HANDSET

CAUTION: If submerged in water, the remote handset could be damaged irreparably. Ensure the remote handset is **ALWAYS** returned to its holder after use.

The remote handset has two LEDs and four control buttons as shown in Fig 0008 and is located in the holder on the side of the bath.

- LED illuminates to indicate that mains power is supplied (a).
- LED flashes when mains power is lost (b).
- Positions seat outside of the bath (c).
- Positions seat inside of the bath (d).
- Raises the bath (e).
- Lowers the bath (f).

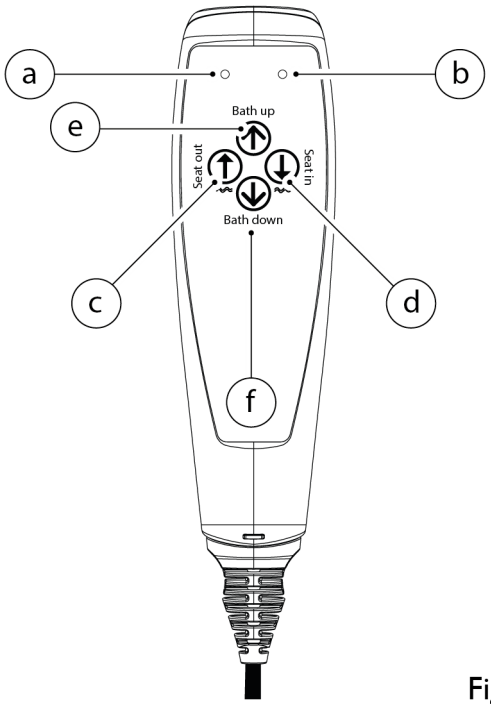

Fig 0008

1. To operate any of the buttons, press lightly and hold. Releasing it at any time will stop the operation.

2. All operations automatically stop once they have reached their maximum extent; when the bath is at its maximum height, for example.

3. It is completely safe to operate the handset with wet hands, but it should never be immersed in water, so always return to the holder after use.

NOTE: In the event of a power cut, the system is protected by Battery Back-Up, so the user can still safely exit the bath. In Battery Back-Up mode, the seat and bath will operate at half speed. When the Battery Back-Up begins to lose power, there is an audible beep each time a button is pressed on the handset.

CLOSE THE POP-UP WASTE

The bath comes with a pop-up waste as standard.

1. Refer to Fig 0196. Turn the chrome handle (a) anti-clockwise and the pop-up waste plug (b) closes.

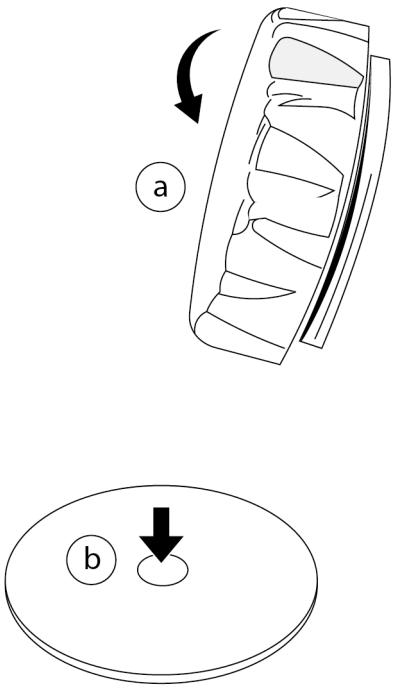

Fig 0196

FILL THE BATH

WARNING RISK OF SCALDING: Not checking the water temperature could cause serious injury or be fatal. The temperature of the hot water is limited to 43°C for safety. Use a thermometer to observe the temperature whilst filling and again before transferring the bather into the bath.

Refer to Fig 0307. Depending on the options chosen you may have a twin lever bath filler (a), or the Autofill option (b).

1. Open the hot tap (c) and fill the bath to half full, or press the red autofill button (d) checking the temperature with a thermometer.

2. Where necessary adjust the temperature using the cold tap (e) or the blue autofill button (f).

The bath is now ready for the bather. Topping up the bath should be carried out when the bather is in position so that the carer can fill to the appropriate depth for the individual.

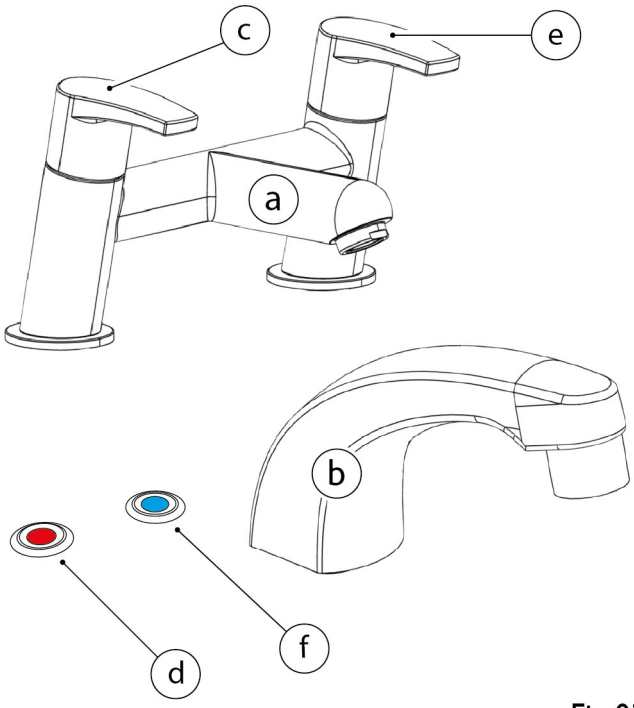

Fig 0307

CAUTION: Do not exert excessive pressure on the bath panels as this may cause them to become ill-fitting or damaged over time.

TRANSFER BATHER INTO THE BATH

NOTE: The arms lift to allow easier access for the bather.

CAUTION: DO NOT attempt to use this equipment if you have not been fully trained. Escalate to your local representative or contact **Gainsborough Healthcare Group Ltd.** on 01527 400022 and ask about product training sessions.

WARNING RISK OF ENTRAPMENT: Operating this bath/equipment when the bather is unsecured/unattended could cause serious injury or be fatal by entrapment. Ensure the bather is **NOT** left unattended and is seated properly with the safety lap strap **ALWAYS** secured.

1. Refer to Fig 0002. Allow or assist the bather to transfer onto the fixed seat. The safety lap strap should be clipped securely around them and the arm rests should be down with the bather holding the handle grips. The bather's arms and legs should be positioned securely within the seat.

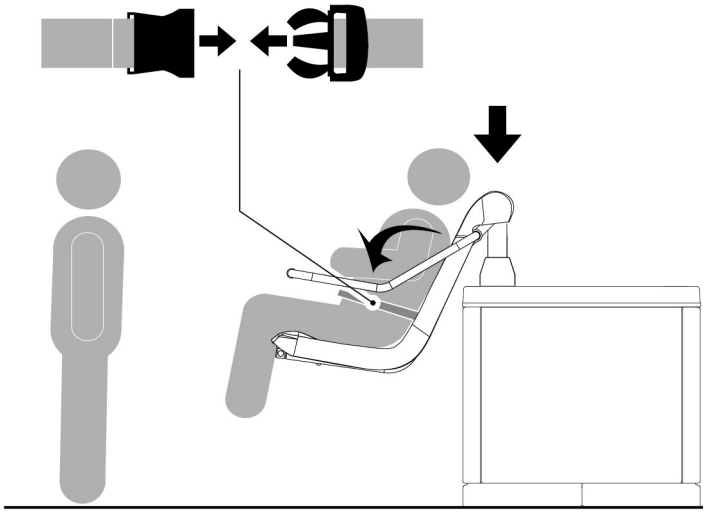

Fig 0002

2. Observe the bather at all times. Press the Seat in button and the seat will start to lift. Please see *remote handset, page 16* for details. The seat may be stopped at any time by releasing the button.

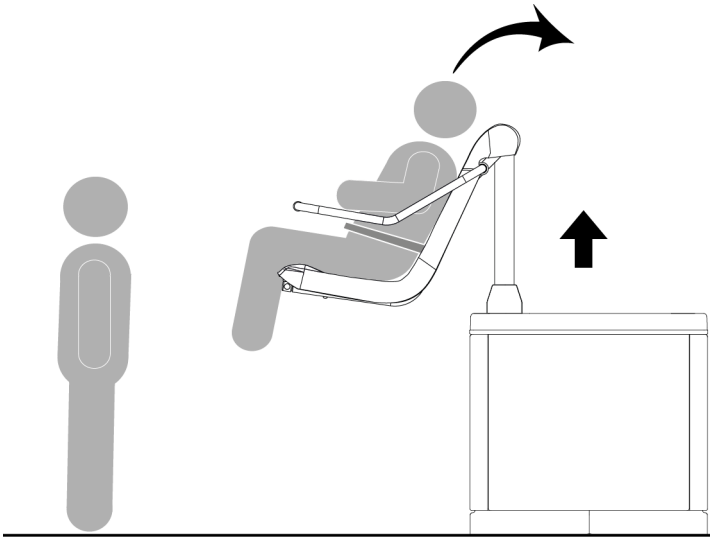

Fig 0004

WARNING RISK OF ENTRAPMENT: Ensure that the bather is able to lift their legs over the edge of the bath whilst the seat is being moved into position. If they are unable to do this themselves, then they must be assisted in doing so to avoid potential serious injury by entrapment.

3. Continuing to press the Seat in button, the seat will now raise to its maximum height and will turn into position over the bath. Release the button before it starts to lower the bather into the bath so that the next step can be completed.

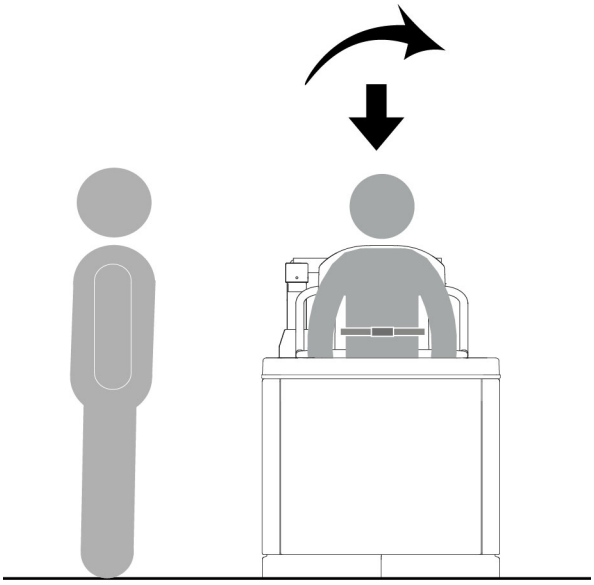

Fig 0009

WARNING RISK OF ENTRAPMENT: Ensure that the bather's legs are not tucked under the seat when the seat is descending into the bath as this could cause serious injury.

4. Adjust the bath height using the Bath up and Bath down buttons to a comfortable height for the carer. The bath may be stopped at any time by releasing the button.

5. Continue to press the Seat in button until the operation is complete and the bather is in the bath.

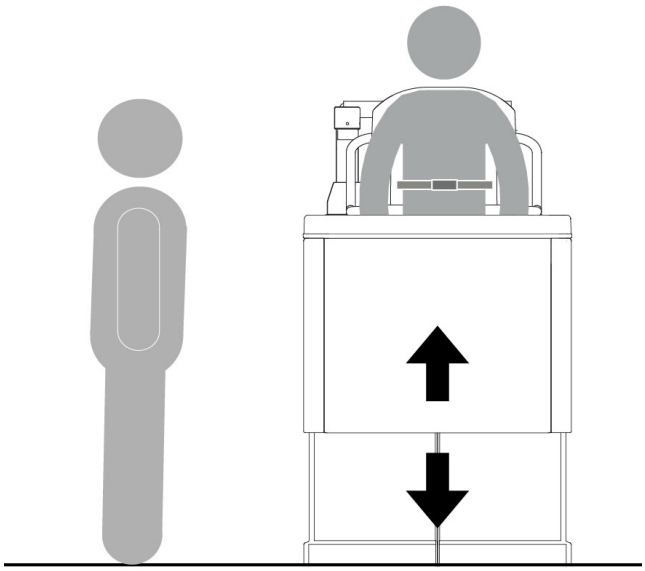

Fig 0010

TOP UP THE BATH

WARNING RISK OF SCALDING: Not checking the water temperature could cause serious injury or be fatal. The temperature of the hot water is limited to 43°C for safety. Use a thermometer to observe the temperature whilst filling and again before transferring the bather into the bath.

Refer to Fig 0307. Depending on the options chosen you may have a twin lever bath filler (a), or the Autofill option (b).

1. Whilst observing the bather, open the hot tap (c) or press the red autofill button (d) and top up the bath, checking the temperature with a thermometer.

2. Where necessary adjust the temperature using the cold tap (e) or the blue autofill button (f).

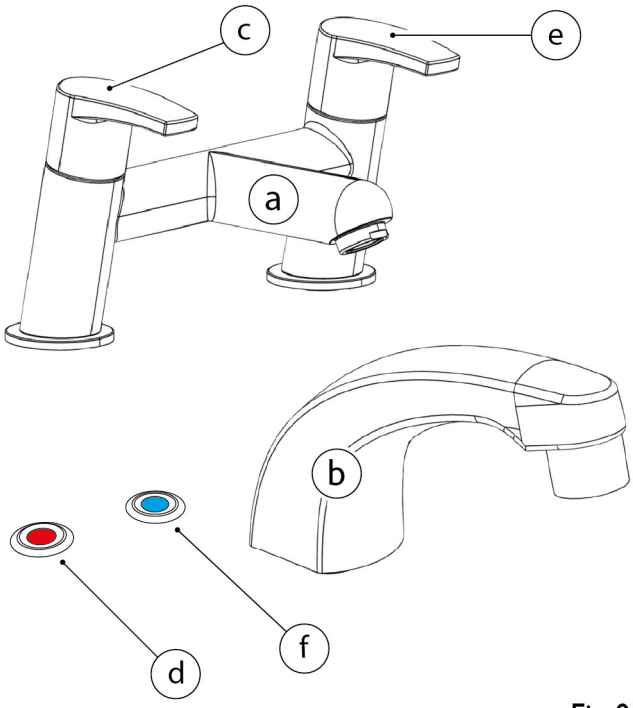

Fig 0307

TRANSFER BATHER OUT OF THE BATH

Observe the bather during all operations.

1. Ensure the bather is positioned in the seat with the safety lap strap fitted and the seat arms in the lowered position. The bather's arms and legs should be positioned securely within the seat.

2. Press the Seat out button on the handset. The seat may be stopped at any time by releasing the button.

3. This operation will raise the seat out of the bath to its maximum height. The seat will then turn out and lower the bather outside the bath.

4. Raise the seat arms, release the safety lap strap and the bather can then exit the seat.

CAUTION: Do not exert excessive pressure on the bath panels as this may cause them to become ill-fitting or damaged over time.

EMPTY THE BATH

The bath comes with a pop-up waste as standard.

1. Refer to Fig 0011. Open the pop-up waste by turning the chrome handle (a) clockwise. The waste plug (b) then opens to drain the bath.

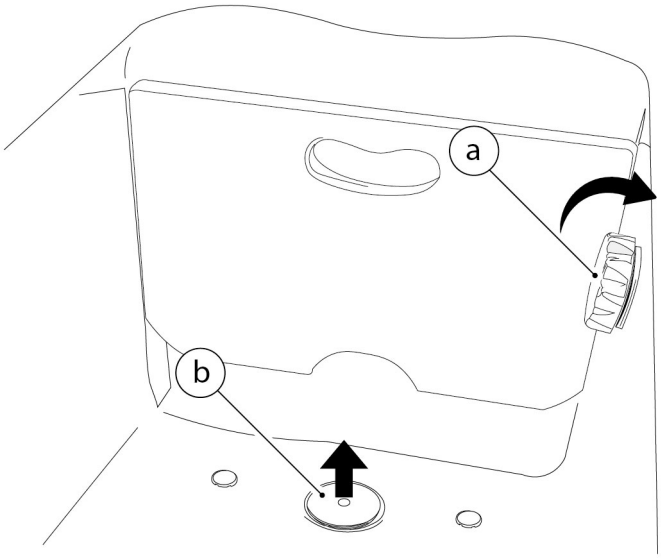

Fig 0011

OPTIONAL EQUIPMENT

For further information on the Air Spa, Chromotherapy Lighting or Sound System, please refer to the Accessories User Manual.

SHEPHERD'S CROOK SHOWER

The shower system operates as follows:

1. As shown in Fig 0020, remove the shower head (a) from the holder and turn the temperature control dial (b) anticlockwise fully. This is the optimum showering temperature, which is controlled by a thermostatic valve and factory set at 38°C for safety.

2. With the shower head directed into the bath, press the trigger spray (c) on the shower head to release the water. Check the temperature is safe with a thermometer and by hand. Release the trigger at any time to stop the water.

3. When showering is complete, turn control dial clockwise.

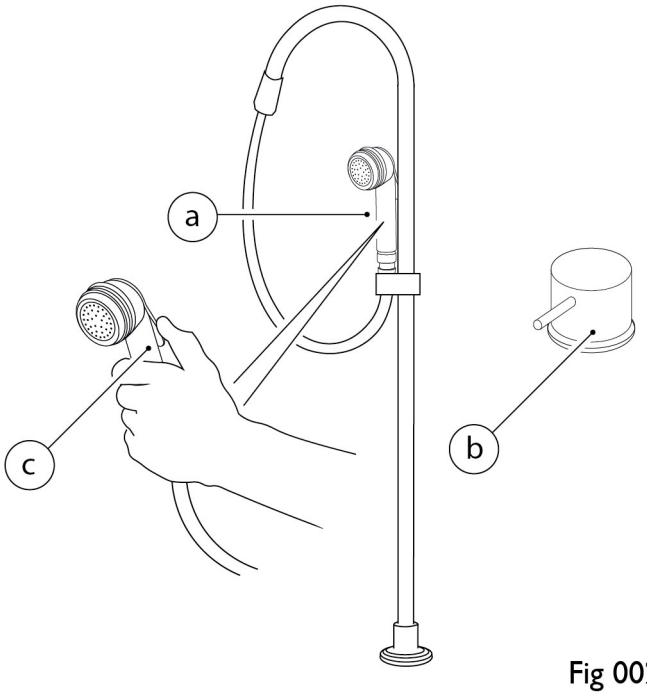

Fig 0020

4. Press the trigger spray to de-pressurise the shower and return the shower head to its holder.

EASY SHOWER 5

The Easy Shower 5 is a Kiwa approved category 5 back-flow prevention device. It protects the water supply from any contaminants in the bathing water. The system operates as follows:

1. Referring to Fig 0394, remove the shower head (a) from the holder (b) and turn the temperature control dial (c) anticlockwise fully until it is at its maximum temperature (indicated on the dial in red). This is the optimum showering temperature, which is controlled by a thermostatic valve and factory set at 38°C for safety.

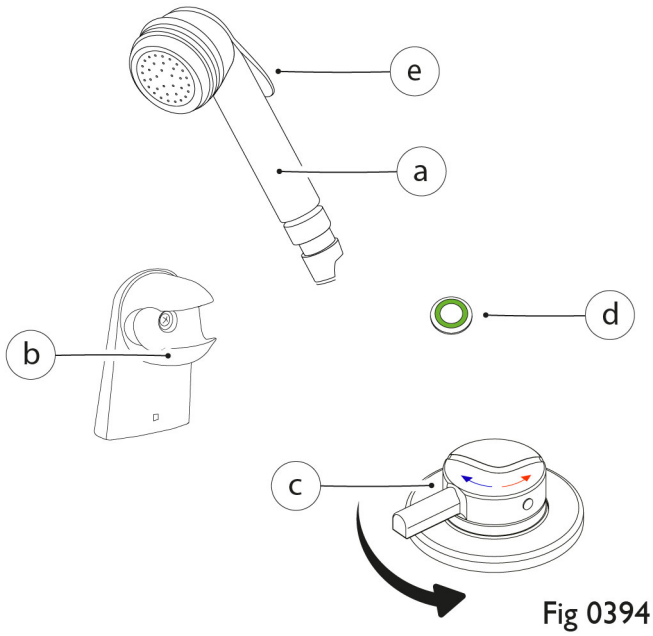

Fig 0394

2. Press the power button (d) and this will begin priming the shower pump. Once primed, the pump will stop and the shower is ready to use.

3. With the shower head directed into the bath, press the trigger (e) on the shower head to release the water. The pump will be active whenever the trigger is pressed. Check the temperature is safe with a thermometer and by hand. Release the trigger at any time to stop the water.

4. When showering is complete, turn the temperature control dial clockwise fully to its minimum temperature (indicated on the dial in blue) to stop the shower.

5. Press the power button to turn off the shower system. The green light will go out, indicating that the shower has been successfully switched off.

6. With the shower head over the bath, press the trigger to depressurise the system and then return the shower head to its holder to ensure that any excess water goes into the bath.

FOOTBOARD

1. Refer to Fig 0005. Using the cut-out handle (a) locate the footboard into the appropriate recesses (b), depending on the size of the bather. When in position, push footboard fully down.

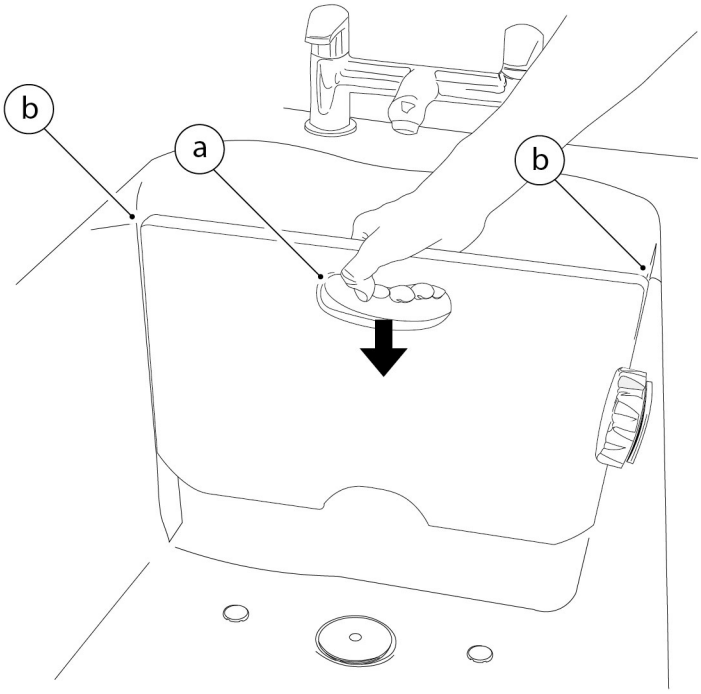

Fig 0005

AUTOFILL

NOTE: The autofill buttons glow red (hot water) and blue (cold water) constantly until pressed and will flash during filling.

NOTE: The autofill option has a pre-set temperature of 43°C.

Autofill allows the bath to be filled at the press of a button prior to the bather entering the bath. The carer is free to administer to the bather in another room, if necessary, without any concern of the bath overflowing in their absence.

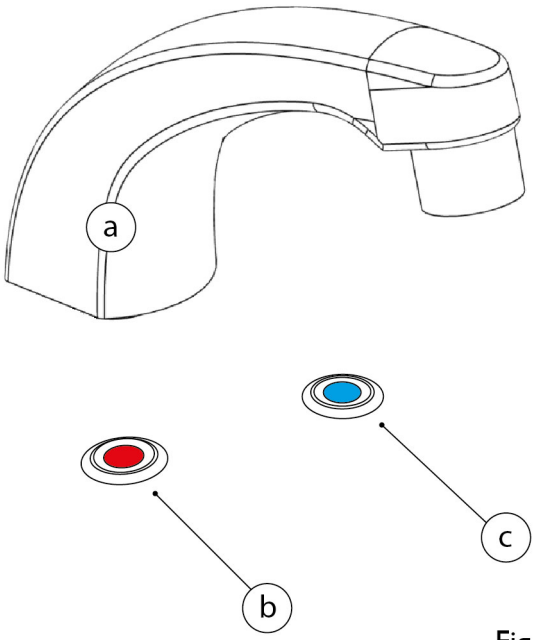

Fig 0246

Hot Water

The autofill option has a spout (a) as shown in Fig 0246. The hot water button (b) will be lit red. Press it once to initiate the water flow and the button will flash whilst this is happening. The water flow can be stopped at any time by pressing the button again.

To add more hot water, press the hot water button again. Check the water temperature with a thermometer - it should not exceed 43°C.

Cold Water

To reduce the temperature of the water, press the cold water button (c). The water flow can be stopped at any time by pressing the button again.

Check the water temperature with a thermometer.

Automatic Shutoff

Once one of the buttons has been pressed, the bath will fill to the lower level sensor at 75 mm below the overflow and stop automatically. If deeper water is required, the buttons can be pressed again, but autofill will automatically stop when the water reaches the higher level sensor at 10 mm below the overflow. Once the bath is filled to its maximum level, the lights will go out on the buttons to indicate that they cannot be pressed again.

It is not possible to add any more water to the bath once the water has reached the higher sensor - some of the water must be emptied first before autofill will allow more to be added.

Tamperproof Lockout

Autofill has a lockout to prevent wastage of water and tampering. To lock, press and hold both the hot water button and the cold water button for 10 seconds. The buttons will turn green, confirming that lockout is engaged.

To unlock, press and hold both the hot water button and the cold water button for 10 seconds again. The buttons will turn back to red and blue, confirming that lockout is disengaged.

TWIN LEVER BATH FILLER

NOTE: The twin lever bath filler option has a pre-set temperature of 43°C.

The twin lever bath filler, shown in Fig 0308, operates as follows.

1. To open the hot tap, turn the hot water handle (a) clockwise. To close the hot tap, turn the hot water handle anticlockwise.
2. To open the cold tap, turn the cold water handle (b), anticlockwise. To close the cold tap, turn the cold water handle clockwise.

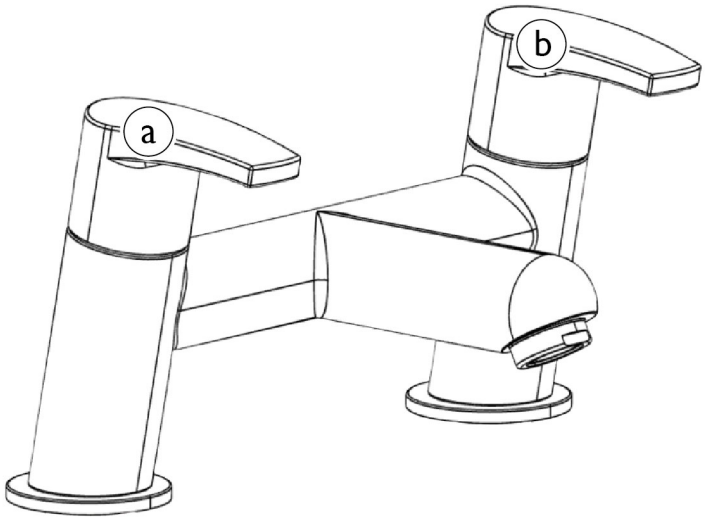

Fig 0308

MAINTENANCE AND CLEANING

CAUTION: The bath and any additional equipment could become damaged or wear prematurely if thorough, regular, cleaning and maintenance is not carried out. Contact bath supplier for clarification or additional assistance if required.

NOTE: Ensure your bath is cleaned, serviced and maintained regularly. Maintenance and cleaning information is provided for maintenance staff employed to look after the bath equipment supplied.

Contact: Please ask for details of the of **Gainsborough Healthcare Group Ltd.** Service and Maintenance Agreement on 01527 400022.

It is of the utmost importance to follow the Health and Safety information (see Safety Information), before carrying out any cleaning or maintenance procedures. The following routines are a minimum requirement. Where a high volume of use occurs, increase the frequency as appropriate.

In addition to the maintenance and cleaning requirements detailed here, it is the responsibility of those who own or control the equipment, under the Provision and Use of Work Equipment Regulations 1998 (PUWER), to ensure where applicable, that periodic Lifting Operations and Lifting Equipment Regulations (LOLER) testing is undertaken.

DAILY

Routine	Method
Visual inspection (before use)	• Inspect the bath for broken equipment, leaks or any general issues
Seat operation	• Use the handset to take the seat through a full cycle of motion, both into and out of the bath
Minor clean (after use)	• Wipe bath whilst draining with a soft damp cloth, then wipe dry

WEEKLY

Routine	Method
Major clean (after use)	• Use cleaning mousse/washing-up liquid, warm water and a soft cloth - stubborn stains may require a non-abrasive cream cleaner • Wipe dry
Inspect handset/cable	• Inspect handset and cable for **ANY** signs of damage
Check water temperature	• Using a calibrated thermometer operate the hot tap/autofill and check the water temperature does NOT exceed 43°C

Bath operation	• Operate bath up and down ensure it operates correctly without obstruction or any undue noise

MONTHLY

Routine	Method
Remove Lyme/Calcium deposits	• Water stain deposits may be removed using a non-abrasive cream cleaner
Inspect seat post seal	• Ensure the seat post seal is in good condition see *seat post seal, page 31*
Check remote handset operation	• Operate ALL bath controls ensuring all operations are as expected and free from unusual noises see *remote handset, page 16*
Test RCD	• Operate the Residual Circuit Breaker (RCD) press the test button and reset
Inspect Shepherd's Crook shower	• Ensure the shower pole is fixed/secure and vertical, inspect hose, trigger operation hanger and control see *shepherd's crook shower, page 23*
Check Easy Shower 5	• Operate the Easy Shower 5 if this option is installed and verify that it is working as described see *easy shower 5, page 24*
Test Autofill functionality	• Test the autofill operation and water levels see *autofill, page 26*

SIX MONTHLY

Routine	Method
Visual inspection	• Visually inspect bath ensure there is **NO** damage
Panel inspection	• Check all external bath panels are secure with all screws/ fixings in place
Inspect all optional equipment	• Inspect any optional equipment to ensure it is free from **ANY** damage
Check operation of optional electrical equipment	• Check the operation of the button controls ensure the Air Spa, Chromotherapy Lighting and/or Sound System work in line with the operation information contained in the Accessories User Manual
Servicing	• Servicing by **Gainsborough Healthcare Group Ltd.** or a trained approved company with guidance

ANNUALLY

Routine	Method
Servicing	• Servicing by **Gainsborough Healthcare Group Ltd.** or a trained approved company with guidance

Maintenance Schedule Minimum Frequency	Day	Week	Month	6 Month	Year
Visual inspection (before use)	X				
Seat operation	X				
Minor clean (after use)	X				
Major clean (after use)		X			
Inspect handset/cable		X			
Check water temperature		X			
Bath operation		X			
Remove Lyme/Calcium deposits			X		
Inspect seat post seal			X		
Check remote handset operation			X		
Test RCD			X		
Inspect Shepherd's Crook shower			X		
Check Easy Shower 5			X		
Test autofill functionality			X		
Visual inspection				X	
Panel inspection				X	
Inspect all optional equipment				X	
Check operation of all optional equipment				X	
Servicing				X	
Servicing					X

SEAT POST SEAL

It is important that the seat post seal is present and securely in place to ensure that water ingress does not cause damage to the bath.

Check that the wiper seal (a), as shown in Fig 0654, is located between the seat post (b) and the bearing housing (c). It should be smooth, undamaged and not folded over on itself.

Any visible defects or issues with the wiper seal should be dealt with by a service engineer as soon as possible.

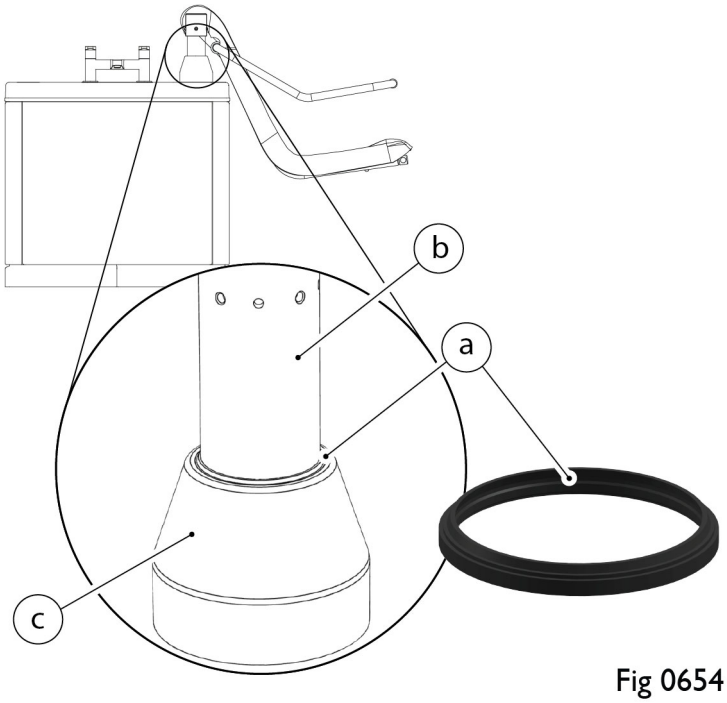

Fig 0654

TROUBLESHOOTING

The following is a basic troubleshooting guide in the event of failure, it is not intended as a comprehensive diagnostic routine. If the bath or equipment fail to operate as intended following these basic checks, please contact your authorised representative or a **Gainsborough Healthcare Group Ltd.** service support engineer on 01527 400022.

PROBLEM	POSSIBLE CAUSE
Bath Inoperative	• Check condition of handset cord and it is securely connected to the bath • Check 5 Amp fused spur (fuse) • Check Residual Current Device (RCD) has power and has not tripped
Bath Judders	• Check there are no obstructions on or around the bath • Check bath is level
Bath Noisy	• Check there are no obstructions on or around the bath • Check if pipework, cables or anything else is obstructing any panels or framework during operation • Check that the panels are not obstructing each other and are free to move
Water Leaking/Loss	• Visually inspect for bath damage • Turn water supply to the bath off to avoid water damage
Bath Uneven	• May occur after a power failure - to attempt a reset, operate handset Bath down button then operate the Seat in button to lowest position, then re-test
Seat Operating At Half Speed	• Mains power supply failure - check 5A SFS and RCD
Items Visibly Damaged	• Any obviously damaged items should be reported and decommissioned immediately
Audible Beep When Operating Handset	• Mains power supply failure - check 5A SFS and RCD
Air Spa Does Not Operate	• Is the bath filled sufficiently? (See Accessories User Manual) • Ensure mains power is supplied and switched on • Check fuse at the switched fused spur
Chromotherapy Lighting Does Not Operate	• Ensure mains power is supplied and switched on • Check fuse at the switched fused spur

Air Spa And Chromotherapy Lighting Does Not Operate	• Is the bath filled sufficiently? (See Accessories User Manual) • Ensure mains power is supplied and switched on • Check fuse at the switched fused spur
Sound System Does Not Operate	• Ensure mains power is supplied and switched on • Check fuse at the switched fused spur • Have you paired you device with the sound system? Pair your device and retry. (See Accessories User Manual)
Noise Heard After The Spa Is Switched Off	• This is normal operation of the Automatic Purge System. (See Accessories User Manual)

WARRANTY

For information on the warranty supplied with this bath, please refer to separate warranty documentation.

Contact: For further details regarding extended warranties with **Gainsborough Healthcare Group Ltd.**, please call 01527 400022 or email warranties@ghg-uk.com.

DECLARATION OF CONFORMITY

Gainsborough Healthcare Group
Life enhancing bathing

Declaration of Conformity

CE

Manufacturer's name: Gainsborough Healthcare Group Ltd
Manufacturer's Address: 10 & 11 The Oaks
Clews Road
Redditch
Worcestershire
B98 7ST
Equipment Type: Bath Chassis with Powered Seat

Gainsborough Healthcare Group Ltd solely declares that the below products comply with the essential requirements and fulfil the provision of the CE marking.

Bath Model	UDI	P/N	
Gentona 1500 - Height Adjustable Bath with Powered Seat	(01)0506096811026 0	BGEW5LHFS	BGEW5RHFS
Gentona 1700 - Height Adjustable Bath with Powered Seat	(01)0506096811027 7	BGEW7LHFS	BGEW7RHFS
Gentona 1500 DTS - Height Adjustable Bath with Detachable Transfer Seat	(01)0506096811028 4	BGEW5LHGT	BGEW5RHGT
Gentona 1700 DTS - Height Adjustable Bath with Detachable Transfer Seat	(01)0506096811029 1	BGEW7LHGT	BGEW7RHGT
Ezion 1500 - Height Adjustable Bath with Powered Seat and Leg Lift	(01)0506096811030 7	BEZW5LHFS	BEZW5RHFS
Ezion 1700 - Height Adjustable Bath with Powered Seat and Leg Lift	(01)0506096811031 4	BEZW5LHFS	BEZW5RHFS
Talano 1500 - Fixed Height Bath with Powered Seat	(01)0506096811032 1	BTAW5LHFS	BTAW5RHFS
Talano 1700 - Fixed Height Bath with Powered Seat	(01)0506096811033 8	BTAW7LHFS	BTAW7RHFS
Talano 1500 DTS - Fixed Height Bath with Detachable Transfer Seat	(01)0506096811034 5	BTAW5LHGT	BTAW5RHGT
Talano 1700 DTS - Fixed Height Bath with Detachable Transfer Seat	(01)0506096811035 2	BTAW7LHGT	BTAW7RHGT
Alera 1500 - Fixed Height Bath with Powered Seat and Leg Lift	(01)0506096811036 9	BALW5LHFS	BALW5RHFS
Alera 1700 - Fixed Height Bath with Powered Seat and Leg Lift	(01)0506096811037 6	BALW7LHFS	BALW7RHFS
Torin 1500 - Height Adjustable bath	(01)0506096811024 6	BTOW5LH	BTOW5RH
Torin 1700 - Height Adjustable bath	(01)0506096811025 3	BTOW7LH	BTOW7RH
Trade Names	**UDI**	**P/N**	
PRO Comfort 1500 - Height Adjustable Bath with Powered Seat	(01)0506096811047 5	CVW5LHFS	CVW5RHFS
PRO Comfort 1700 - Height Adjustable Bath with Powered Seat	(01)0506096811048 2	CVW7LHFS	CVW7RHFS
PRO Comfort 1500 - Height Adjustable Bath with Detachable Transfer Seat	(01)0506096811053 6	CVW5LHGT	CVW5RHGT
PRO Comfort 1700 - Height Adjustable Bath with Detachable Transfer Seat	(01)0506096811054 3	CVW7LHGT	CVW7RHGT
PRO Comfort 1500 - Fixed Height Bath with Powered Seat	(01)0506096811049 9	CFW5LHFS	CFW5RHFS
PRO Comfort 1700 - Fixed Height Bath with Powered Seat	(01)0506096811050 5	CFW7LHFS	CFW7RHFS
PRO Comfort 1500 - Fixed Height Bath with Powered Seat and Leg Lift	(01)0506096811051 2	CLW5LHFS	CLW5RHFS
PRO Comfort 1700 - Fixed Height Bath with Powered Seat and Leg Lift	(01)0506096811052 9	CLW7LHFS	CLW7RHFS
Libra - Fixed Height Bath with Powered Seat	(01)0506096811057 4	LIW7LHFH	LIW7RHFH
Libra - Fixed Height Bath with Powered Seat and Leg Lift	(01)0506096811058 1	LIW7LHFHLL	LIW7RHFHLL
Libra - Height Adjustable Bath with Powered Seat	(01)0506096811059 8	LIW7LHVH	LIW7RHVH
Libra - Height Adjustable Bath with Powered Seat and Leg Lift	(01)0506096811060 4	LIW7LHVHLL	LIW7RHVHLL
Virgo - Height Adjustable Bath	(01)0506096811061 1	VIW7LHVH	VIW7RHVH

The products correspond to Class 1 Medical Device Directive.

The following standards and European Directives apply:

- 2006/42/EC Machinery Directive
- MDR 2017-745/EU – Class 1 Medical Device
- ROHS – Restriction of Hazardous Substances
- IEC 60601
- BS EN 60601-01-11 – General requirements for basic health and safety and essential performance – Home healthcare environment
- BS EN 60601-1-6 – General requirements for basic safety and essential performance
- BS EN 62366-1 – Application of usability engineering to medical devices
- BS EN ISO 10535 :2021 – Assistive products – Hoists for the transfer of persons – Requirements and test methods
- BS EN ISO 10993-1 – 2022 – Biological Evaluation of medical devices
- BS EN ISO 21856-2022 – Assistive products – General requirements and test methods

……..

Peter Eckhardt
C.E.O

For and on behalf of Gainsborough Healthcare Group Ltd

Date of issue; 15/12/2021

Registered in England No. 10433373 | VAT No. 254046128

Gainsborough Healthcare Group
Life enhancing bathing

UK CA

Declaration of Conformity

Manufacturer's name: Gainsborough Healthcare Group Ltd
Manufacturer's Address: 10 & 11 The Oaks
Clews Road
Redditch
Worcestershire
B98 7ST
Equipment Type: Bath Chassis with Powered Seat

Gainsborough Healthcare Group Ltd solely declares that the below products comply with the essential requirements and fulfil the provision of the UKCA marking.

Bath Model	UDI	P/N	
Gentona 1500 - Height Adjustable Bath with Powered Seat	(01)05060968110260	BGEW5LHFS	BGEW5RHFS
Gentona 1700 - Height Adjustable Bath with Powered Seat	(01)05060968110277	BGEW7LHFS	BGEW7RHFS
Gentona 1500 DTS - Height Adjustable Bath with Detachable Transfer Seat	(01)05060968110284	BGEW5LHGT	BGEW5RHGT
Gentona 1700 DTS - Height Adjustable Bath with Detachable Transfer Seat	(01)05060968110291	BGEW7LHGT	BGEW7RHGT
Ezion 1500 - Height Adjustable Bath with Powered Seat and Leg Lift	(01)05060968110307	BEZW5LHFS	BEZW5RHFS
Ezion 1700 - Height Adjustable Bath with Powered Seat and Leg Lift	(01)05060968110314	BEZW5LHFS	BEZW5RHFS
Talano 1500 - Fixed Height Bath with Powered Seat	(01)05060968110321	BTAW5LHFS	BTAW5RHFS
Talano 1700 - Fixed Height Bath with Powered Seat	(01)05060968110338	BTAW7LHFS	BTAW7RHFS
Talano 1500 DTS - Fixed Height Bath with Detachable Transfer Seat	(01)05060968110345	BTAW5LHGT	BTAW5RHGT
Talano 1700 DTS - Fixed Height Bath with Detachable Transfer Seat	(01)05060968110352	BTAW7LHGT	BTAW7RHGT
Alera 1500 - Fixed Height Bath with Powered Seat and Leg Lift	(01)05060968110369	BALW5LHFS	BALW5RHFS
Alera 1700 - Fixed Height Bath with Powered Seat and Leg Lift	(01)05060968110376	BALW7LHFS	BALW7RHFS
Torin 1500 - Height Adjustable bath	(01)05060968110246	BTOW5LH	BTOW5RH
Torin 1700 - Height Adjustable bath	(01)05060968110253	BTOW7LH	BTOW7RH
Trade Names	**UDI**	**P/N**	
PRO Comfort 1500 - Height Adjustable Bath with Powered Seat	(01)05060968110475	CVW5LHFS	CVW5RHFS
PRO Comfort 1700 - Height Adjustable Bath with Powered Seat	(01)05060968110482	CVW7LHFS	CVW7RHFS
PRO Comfort 1500 - Height Adjustable Bath with Detachable Transfer Seat	(01)05060968110536	CVW5LHGT	CVW5RHGT
PRO Comfort 1700 - Height Adjustable Bath with Detachable Transfer Seat	(01)05060968110543	CVW7LHGT	CVW7RHGT
PRO Comfort 1500 - Fixed Height Bath with Powered Seat	(01)05060968110499	CFW5LHFS	CFW5RHFS
PRO Comfort 1700 - Fixed Height Bath with Powered Seat	(01)05060968110505	CFW7LHFS	CFW7RHFS
PRO Comfort 1500 - Fixed Height Bath with Powered Seat and Leg Lift	(01)05060968110512	CLW5LHFS	CLW5RHFS
PRO Comfort 1700 - Fixed Height Bath with Powered Seat and Leg Lift	(01)05060968110529	CLW7LHFS	CLW7RHFS
Libra - Fixed Height Bath with Powered Seat	(01)05060968110574	LIW7LHFH	LIW7RHFH
Libra - Fixed Height Bath with Powered Seat and Leg Lift	(01)05060968110581	LIW7LHFHLL	LIW7RHFHLL
Libra - Height Adjustable Bath with Powered Seat	(01)05060968110598	LIW7LHVH	LIW7RHVH
Libra - Height Adjustable Bath with Powered Seat and Leg Lift	(01)05060968110604	LIW7LHVHLL	LIW7RHVHLL
Virgo - Height Adjustable Bath	(01)05060968110611	VIW7LHVH	VIW7RHVH

The products correspond to Class 1 Medical Device Directive.

The following standards and European Directives apply:

- 2006/42/EC Machinery Directive
- MDR 2017-745/EU – Class 1 Medical Device
- ROHS – Restriction of Hazardous Substances
- IEC 60601
- BS EN 60601-01-11 – General requirements for basic health and safety and essential performance – Home healthcare environment
- BS EN 60601-1-6 – General requirements for basic safety and essential performance
- BS EN 62366-1 – Application of usability engineering to medical devices
- BS EN ISO 10535 :2021 – Assistive products – Hoists for the transfer of persons – Requirements and test methods
- BS EN ISO 10993-1 – 2022 – Biological Evaluation of medical devices
- BS EN ISO 21856-2022 – Assistive products – General requirements and test methods

……..

Peter Eckhardt
C.E.O

For and on behalf of Gainsborough Healthcare Group Ltd

Date of issue; 15/12/2021

Registered in England No. 10433373 | VAT No. 254046128

ELECTROMAGNETIC COMPATIBILITY

Electrical medical equipment is subject to special precautionary measures with regard to EMC and must be installed and operated in accordance with the EMC instructions included in the accompanying documents.

For the devices and systems from **Gainsborough Healthcare Group Ltd.**, no special measures must be observed.

NOTE: Portable and mobile HF-communications equipment can interfere with electrical medical equipment.

The product standard applied to **Gainsborough Healthcare Group Ltd.** are;

- BS EN 60601-1-2:2015 Medical electrical equipment Part 1-2: General requirements for basic safety and essential performance - collateral standard: Electromagnetic disturbances - Requirements and tests.
- BS EN 61000-3-2: 2014 Electromagnetic compatibility EMC. Limits. Limits for harmonic current emissions (equipment input current < 16A per phase).
- BS EN 61000-3-3:2013 Electromagnetic compatibility (EMC). Limits. Limitation of voltage changes, voltage fluctuations and flicker in public low-voltage supply systems, for equipment with rated current < 16A per phase and not subject to conditional connection.

GUIDANCE AND MANUFACTURER'S DECLARATION - ELECTROMAGNETIC IMMUNITY

The Bath Chassis with Powered Seat has been designed for use in the following listed electromagnetic environments. The customer or the user of the Bath Chassis with Powered Seat must ensure that the appliance is used in such environment.

Emission Measurements	*Compliance*	*Electromagnetic Environment Guidance*
High frequency (HF) Radiated Emissions to BS EN 55011	Group 1 - no internally generated electromagnetic radiation	The Bath Chassis with Powered Seat does not use HF radiation for internal functions. Therefore, the HF radiation of the device is very low and any interference with adjacent electrical equipment is unlikely.
High frequency (HF) Radiated emissions to BS EN 55011	Class B	The Bath Chassis with Powered Seat is intended for use in any type of facility including living quarters and those that are directly connected to a public mains network that supplies residential buildings and buildings used for domestic purposes.
Conducted Emissions to BS EN 55014	Class B	
Harmonics to IEC 6100-3-2	Class A	
Voltage fluctuations / flicker to IEC 6100-3-3	Compliant	

Immunity Testing	*BS EN 60601 - Test Level*	*Compliance Level*	*Electromagnetic Environment Guidance*
Discharging of static electricity (ESD) to BS EN 61000-4-2	+- 8kV contact discharge. +- 15kV air discharge	+- 8kV contact discharge. +- 15kV air discharge	The floor must be in wood, concrete or ceramic tiles. In case of floors in synthetic material, the relevant air humidity must be at least 30%.
Rapid transient interference pulses/ burst BS EN 61000-4-4	+-2kV for power supply cables	+-2kV for power supply cables	The quality of the supply voltage should match that of a typical business or hospital environment.
Overvoltage (Surges) BS EN 61000-4-5	+-1kV Mains cable connection differential mode +-2kV Mains Cable common mode	+-1kV Mains cable connection differential mode +-2kV Mains Cable common mode	The quality of the supply voltage should match that of a typical business or hospital environment.
Voltage drops, short interruptions and voltage fluctuations in the power supply input cables IEC 61000-4-11	<5% Ut (>95% drop of Ut) For 0.5 period <5% Ut (>95% drop of Ut) For 0.5 period <70% Ut (>30% drop of Ut) For 25 periods <5% Ut (>95% drop of Ut) For 5s	<5% Ut (>95% drop of Ut) For 0.5 period <5% Ut (>95% drop of Ut) For 0.5 period <70% Ut (>30% drop of Ut) For 25 periods <5% Ut (>95% drop of Ut) For 5s	The quality of the supply voltage should match that of a typical business or hospital environment.
Radiated RF Field Immunity	3 V/m 80MHz - 2700MHz Spot check frequencies in accordance with BS EN 60601-1-2 requirements	3 V/m	

Immunity Testing	*IEC 60601 - Test Level*	*Compliance Level*	*Electromagnetic Environment Guidance*
Conducted RF BS EN 61000-4-6	3 Vrms 150 kHz up to 80 MHz 6 Vrms at spot frequencies	3 Vrms 150 kHz up to 80 MHz 6 Vrms at spot frequencies	Portable and mobile HF communications equipment should be used no closer to any part of the Bath Chassis with Powered Seat including cables, than the recommended separation distance calculated in accordance with the equation applicable to the frequency of the transmitter Recommended separation distance $D=0.35\sqrt{P}$ $D=1.2\sqrt{P}$ 80 MHz up to 800 MHz $D=2.3\sqrt{P}$ 800 MHz up to 2.5 GHz With P as the rated output of the transmitter in Watt (W) in accordance with the manufacturer's specifications and d as the recommended separation distance in meter (m). The field strength of fixed HF-transmitters as determined by an electromagnetic field survey - should be less than the compliance level in each frequency range.
			In the vicinity of equipment marked with this symbol, interference may occur.

NOTE: This manual could possibly not apply to all situations. Electromagnetic propagation is affected by absorption and reflection from structures, objects and people.

The field strength of fixed RF transmitters, such as base stations of mobile phones and land mobile radios, amateur radio stations, AM and FM radios as well as radio and television broadcast media cannot be predicted theoretically with accuracy. To assess the electromagnetic environment due to fixed RF transmitters, an electromagnetic site survey is recommended. If the field strength measured in the environment where the Bath Chassis with Powered Seat is to be used, exceeds the applicable HF compliance level, special care should be taken that a normal operation of the Bath Chassis with Powered Seat can be guaranteed. In case anomalies are identified, additional measures could be required, such as different alignment or a change of the location of the Bath Chassis with Powered Seat.
In the frequency range from 150 kHZ to 80 MHz, the field strength must be less than 3 V/m.

Rated Output of the Transmitter	*Separation Distance Depending on the Transmitting Frequency in m*		
	150 kHz to 800 MHz $D=0.35\sqrt{P}$	*80 MHz to 800 MHz* $D=1.2\sqrt{P}$	*800 MHz to 2.5 GHz* $D=2.3\sqrt{P}$
0.01	0.04	0.12	0.23
0.1	0.11	0.38	0.73
1	0.35	1.2	2.3
10	1.1	3.8	7.3
100	3.5	12	23

For transmitters rated at a maximum output power not listed above, the recommended separation distance d in meters (m) can be determined using the equation applicable to the frequency of the transmitter, where P is the maximum output power rating of the transmitter in watts (W) according to the specifications given by the transmitter manufacturer.

NOTE: At 80 MHz and 800 MHz, the separation distance for the higher frequency range applies.

NOTE: These guidelines could not apply to all situations. The dispersion of electromagnetic waves is affected by absorption and reflection from structures, objects and persons.

Gainsborough Healthcare Group

Life enhancing bathing

Gainsborough
SPECIALIST BATHROOMS
Empowering. Healthcare. Solutions

BIO

For service or sales queries please contact:
Tel: 01527 400022
Email: info@gainsboroughbaths.com
10 & 11 Clews Road, Redditch, Worcestershire B98 7ST

CUSTOMER TRAINING RECORD

CUSTOMER DETAILS

Date:	

Address:	

Postcode:	

PRODUCT(S) DISCUSSED AND DEMONSTRATED

Bath Type	Serial Number	Bath Location

Trainer's Name:	

Trainer's Signature:	

CUSTOMER TRAINING RECORD

VERSION 1.7 ~ 09.26

TRAINING ATTENDEES

I agree that I have read and understood the User Manual and that I have been trained on how to use this bath safely and correctly.

Attendee Name	Signature	Position

CAUTION: These products are Class 1 medical devices and should only be used by the above trained people in accordance with the manufacturer's User Manual provided.

A copy of the manufacturer's User Manual has been left with:

Name:	

Signature:	

Position:	